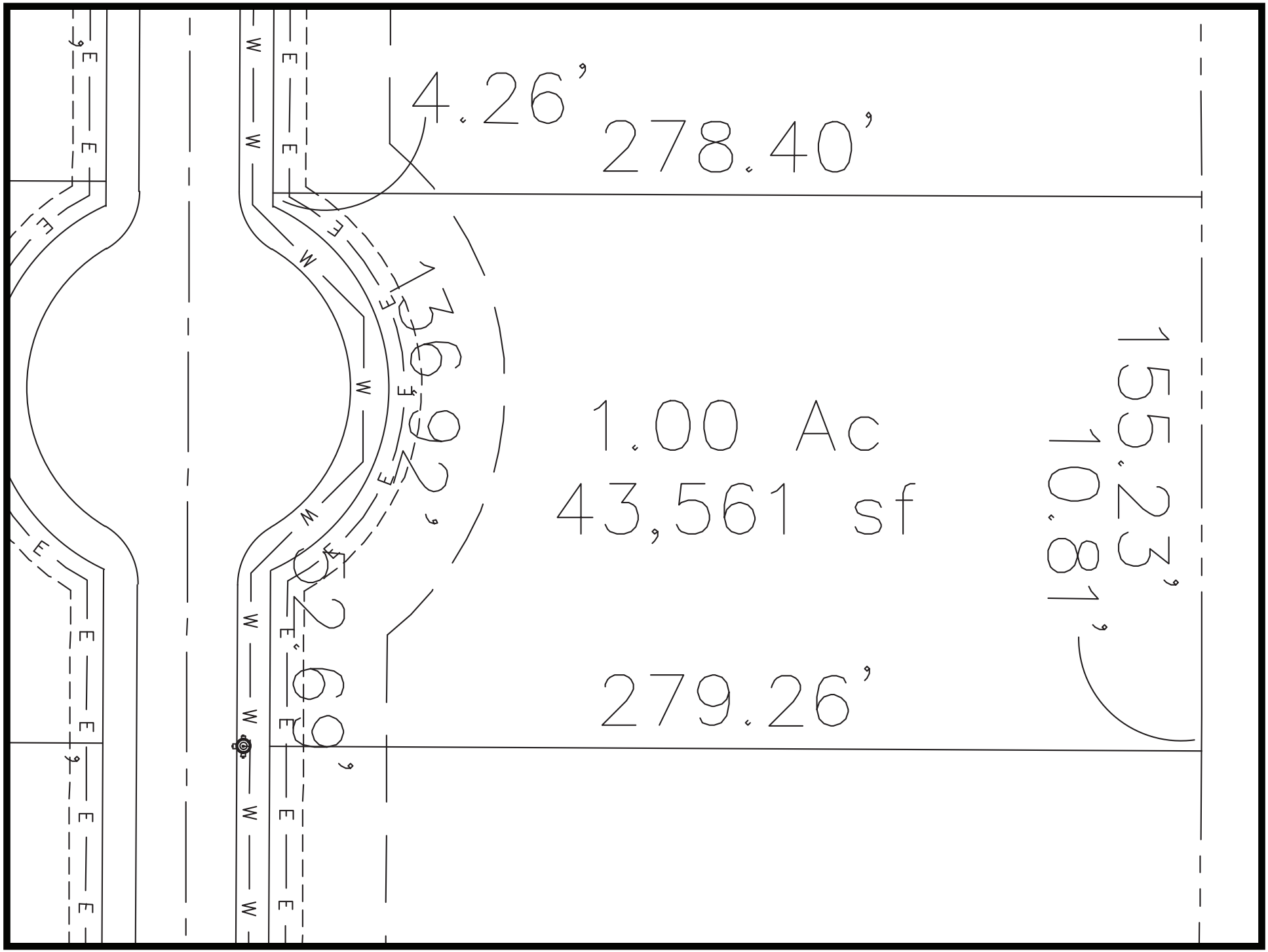LOT 4